# Fuente alimentación/ *Power supply*

**FAI**

320

Fuente de alimentación de tensión constante solo para uso industrial.
Funciona desde 88 ~ 264VAC.
Consigue una alta eficiencia sin ventilador, hasta un 87%, gracias a un diseño optimizado y es capaz de funcionar desde -20ºC ~ +65ºC.

*Constant current power supply for industrial use only. Operates from 88 ~ 264VAC.*
*It achieves high efficiency without fan, up to 87% thanks to an optimized design and is capable of operating from -20ºC ~ +65ºC.*

IP20

12-24 V DC

CB

- **Medidas** / *Dimensions*

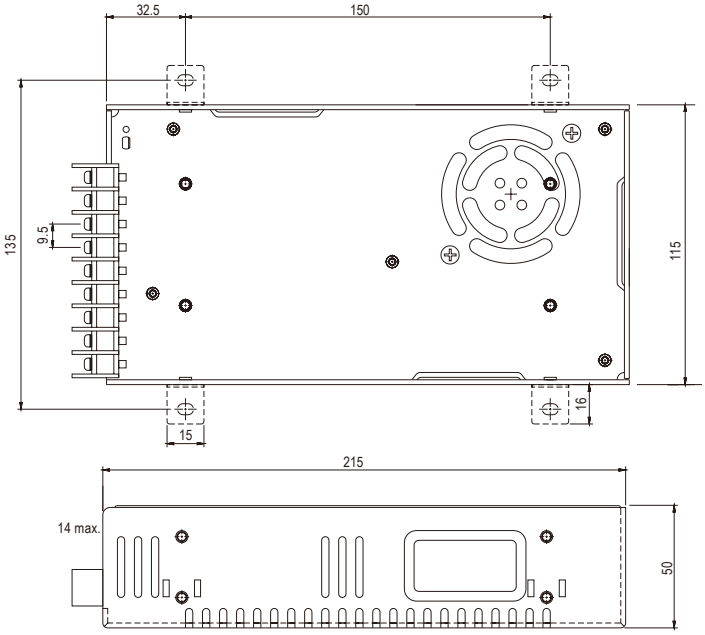


- **Curva de reducción** / *Derating curve*

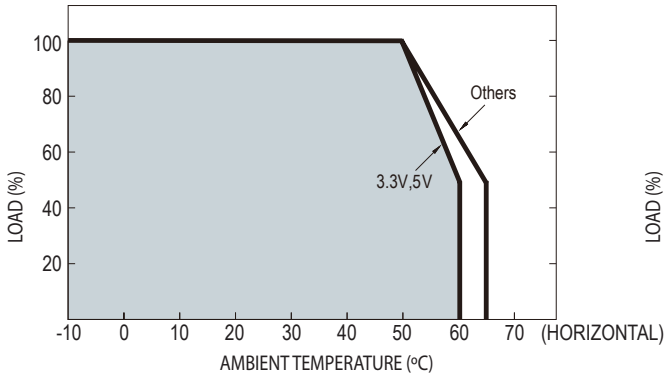


- **Disminución de potencia de salida vs voltaje de entradas**
*Output power deranting vs Input voltage*

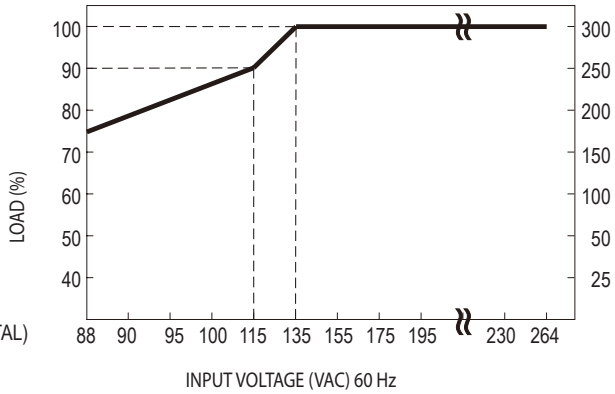

## • **Características** / *Characteristics*

| MODEL | | FI320-12 | FI320-24 |
|---|---|---|---|
| OUTPUT | DC VOLTAGE | 12V | 24V |
| | RATED CURRENT | 25A | 13A |
| | CURRENT RANGE | 0 ~ 25A | 0 ~ 13A |
| | RATED POWER | 300W | 312W |
| | RIPPLE & NOISE (max.) (2) | 150mVp-p | |
| | VOLTAGE ADJ. TOLERANCE | 10 ~ 13.2A | |
| | VOLTAGE TOLERANCE (3) | ±1.0% | |
| | LINE REGULATION | ±0.3% | ±0.2% |
| | LOAD REGULATION | ±0.5% | |
| | SETUP, RISE TIME | 800ms, 50ms / 230VAC 2500ms, 50ms / 115VAC at full load | |
| | HOLD UP TIME (Typ.) | 16ms / 230VAC 16ms/115VAC at full load | |
| INPUT | VOLTAGE RANGE (5) | 88 ~ 264VAC 124 ~ 370VDC | |
| | FREQUENCY RANGE | 47 ~ 63Hz | |
| | POWER FACTOR (Typ.) | PF>0.95/230VAC PF>0.98/115VAC at full load | |
| | EFFICIENCY (Typ.) | 86% | 87% |
| | AC CURRENT (Typ.) 115VAC | 5A | |
| | AC CURRENT (Typ.) 230VAC | 2.5A | |
| | INRUSH CURRENT (Typ.) | 20A/115VAC 40A/230VAC | |
| | LEAKAGE CURRENT | < 1mA / 240 VAC | |
| PROTECTION | OVERLOAD | 105 ~ 135% rated output power | |
| | | Protection type: Hiccup mode, recovers automatically after fault condition is removed | |
| | OVERVOLTAGE | 13.8 ~ 16.2V | 27.6 ~ 32.4V |
| | | Protection type: Shut down o/p voltage, re-power on to recover | |
| | OVER TEMPERATURE | Shut down o/p voltage, recovers automatically after temperature goes down | |
| ENVIRONMENT | WORKING TEMP. | -20 ~ +65ºC (Refer to "Derating Curve") | |
| | WORKING HUMIDITY | 20 ~ 90% RH non-condensing | |
| | STORAGE TEMP., HUMIDITY | -40 ~ +85ºC, 10 ~ 95% RH | |
| | TEMP. COEFFICIENT | ±0.03%/ºC (0 ~ 50ºC) | |
| | VIBRATION | 10 ~ 500Hz, 2G 10min./1cycle, 60min. each along X, Y, Z axes | |
| SAFETY & EMC | SAFETY STANDARDS | UL60950-1, TUV EN60950-1 approved | |
| | WITHSTAND VOLTAGE | I/P-O/P:3KVAC I/P-FG:2KVAC O/P-FG:0.5KVAC | |
| | ISOLATION RESISTANCE | I/P-O/P, I/P-FG, O/P-FG:100M Ohms / 500VDC / 25ºC / 70% RH | |
| | EMC EMISSION | Compliance to EN55032 (CISPR32) Class B, EN61000-3-2 -3 | |
| | EMC IMMUNITY | Compliance to EN61000-4-2,3,4,5,6,8,11; ENV50204, EN55024, light industry level criteria A | |
| OTHERS | MTBF | 207Khrs min. MIL-HDBK-217F (25ºC) | |
| | DIMENSION | 215*115*50mm (L*W*H) | |
| | PACKING | 1.1Kg;12pcs/14Kg/0.92CUFT | |

**NOTE**

1. All parameters NOT specially mentioned are measured at 230VAC input, rated load and 25ºC of ambient temperature.
2. Ripple & noise are measured at 20MHz of banswidth by using a 12" twisted pair-wire terminated with a 0.1uf & 47uf parallel capacitor.
3. Tolerance: includes set up tolerance, line regulation and load regulation.
4. The power supply is considered a component which will be installed into a final equipment. All the EMC tests are been executed by mounting the unit on a 360mm*360mm metal plate with 1mm of thickness. The final equipment must be re-confirmed that it still meets EMC directives. For guidance on how to perform these EMC tests, please refer to "EMI testing of component power supplies."
5. Derating may be needed under low input voltages. Please check the derating curve for more details.